9. Programmable Machines

6.004x Computation Structures
Part 2 – Computer Architecture

Example: Factorial

factorial(N) = N! = N*(N-1)*…*1

C:

```
int a = 1;
int b = N;
do {
  a = a * b;
  b = b - 1;
} while (b != 0)
```

```
initially:    a =   1, b = 5
after iter 1: a =   5, b = 4
after iter 2: a =  20, b = 3
after iter 3: a =  60, b = 2
after iter 4: a = 120, b = 1
after iter 5: a = 120, b = 0
Done!
```

Example: Factorial

factorial(N) = N! = N*(N-1)*…*1

C:

```
int a = 1;
int b = N;
do {
  a = a * b;
  b = b - 1;
} while (b != 0)
```

```
start:  a ← 1,   b ← 5
loop:   a ← 5,   b ← 4
loop:   a ← 20,  b ← 3
loop:   a ← 60,  b ← 2
loop:   a ← 120, b ← 1
loop:   a ← 120, b ← 0
done:
```

High-level FSM:

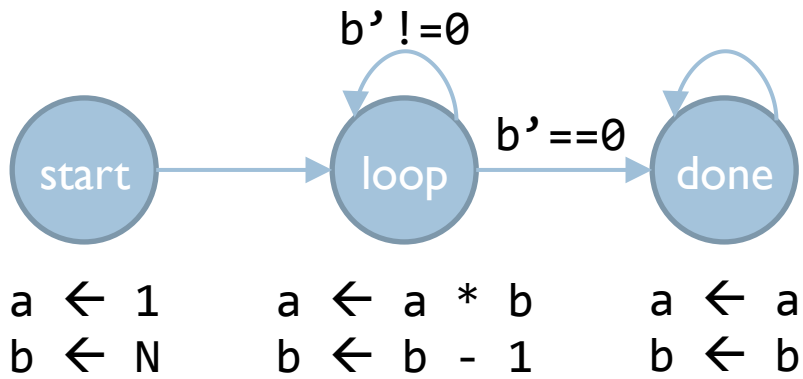

- Helpful to translate into hardware
- D-registers (a, b)
- 2-bits of state (start, loop, done)
- Boolean transitions (b'==0, b'!=0)
- Register assignments in states (e.g., a ← a * b)

Datapath for Factorial

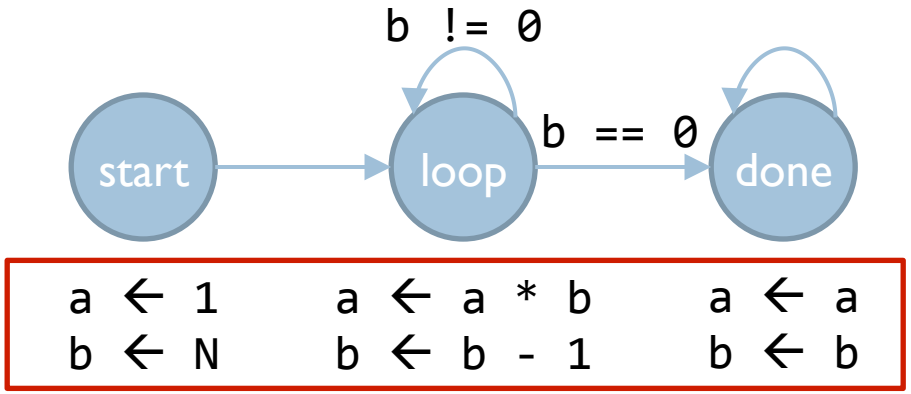

- Draw registers
- Draw combinational circuit for each assignment
- Connect to input muxes

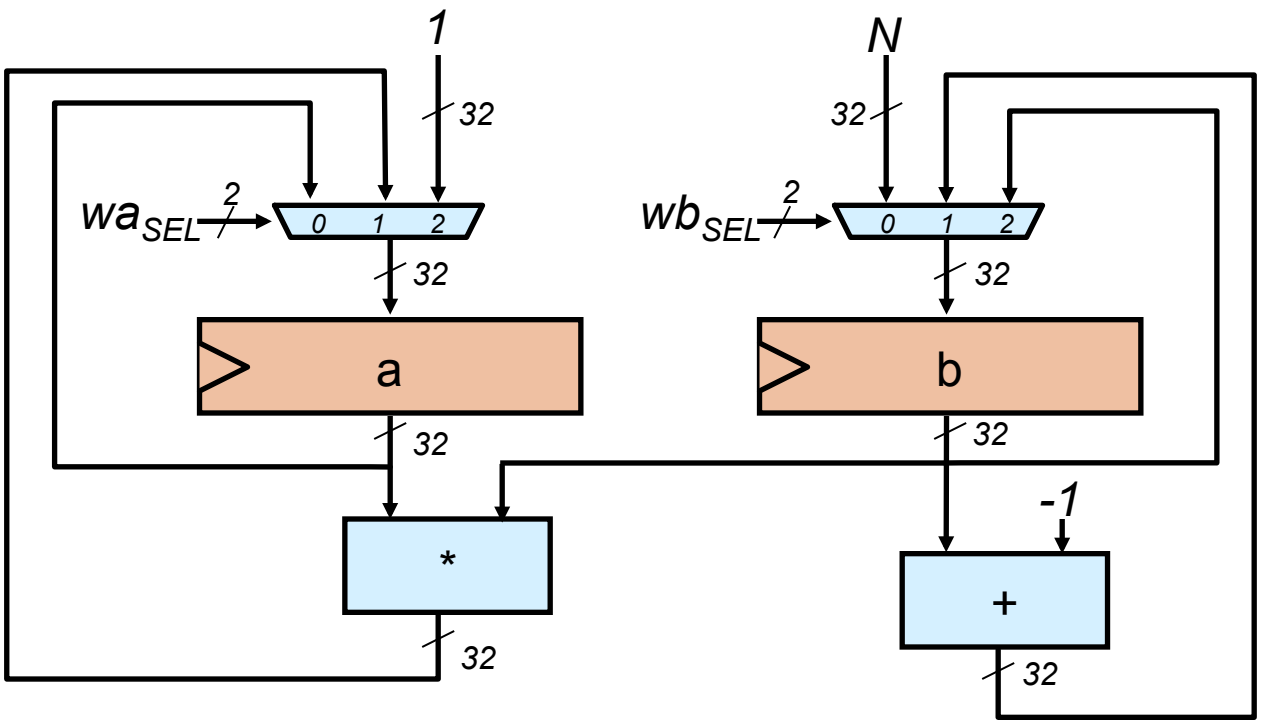

Control FSM for Factorial

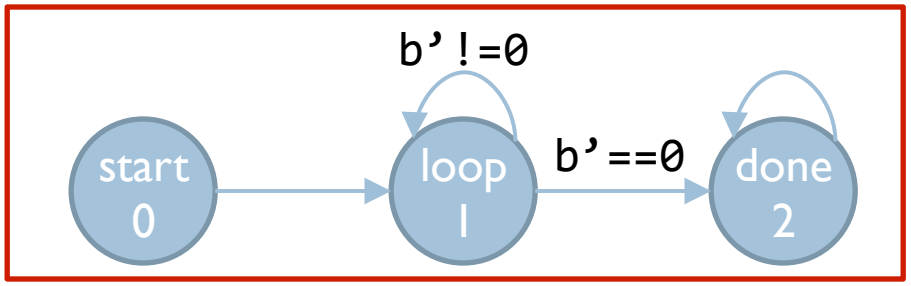


```
a ← 1        a ← a * b        a ← a
b ← N        b ← b - 1        b ← b
```

- Draw combinational logic for transition conditions
- Implement control FSM:
  - States: High-level FSM states
  - Inputs: Transition logic outputs
  - Outputs: Mux select signals

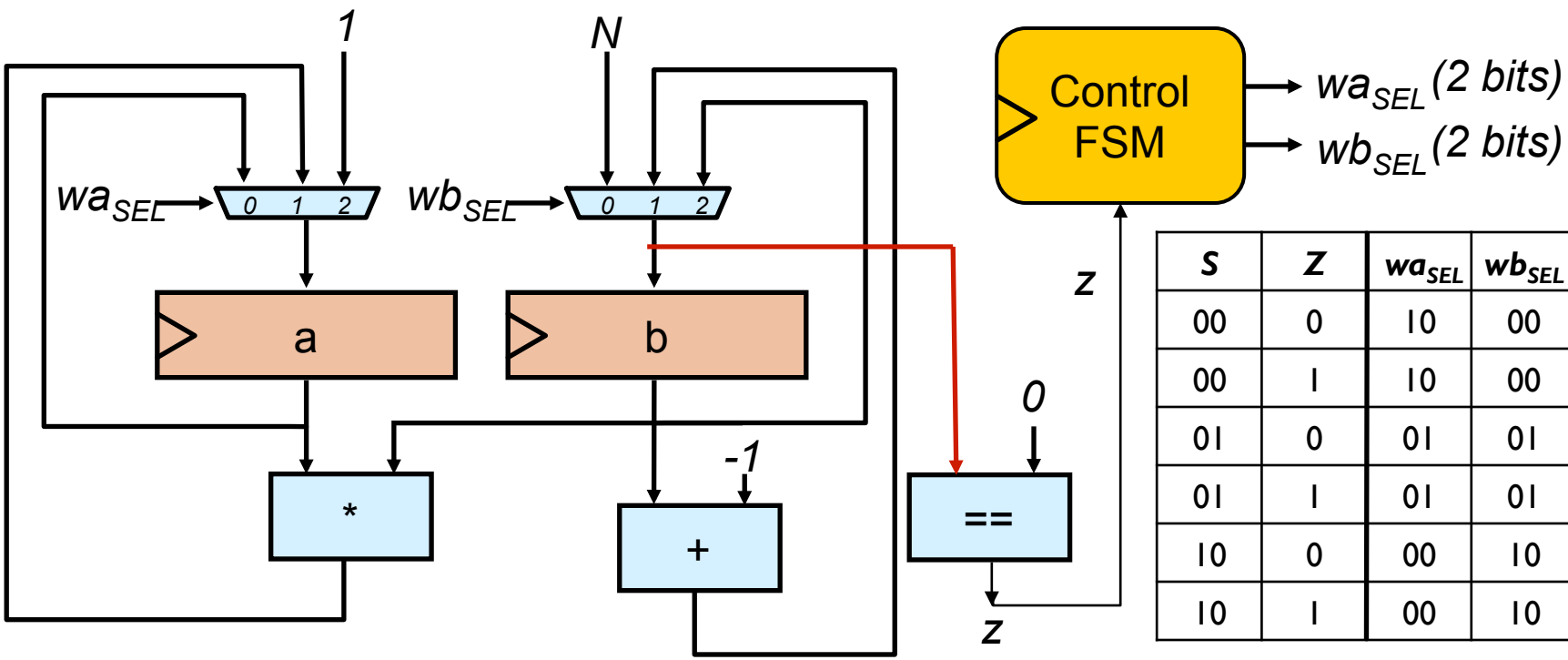

S	Z	wa_{SEL}	wb_{SEL}	S'
00	0	10	00	01
00	1	10	00	01
01	0	01	01	01
01	1	01	01	10
10	0	00	10	10
10	1	00	10	10

Control FSM Hardware

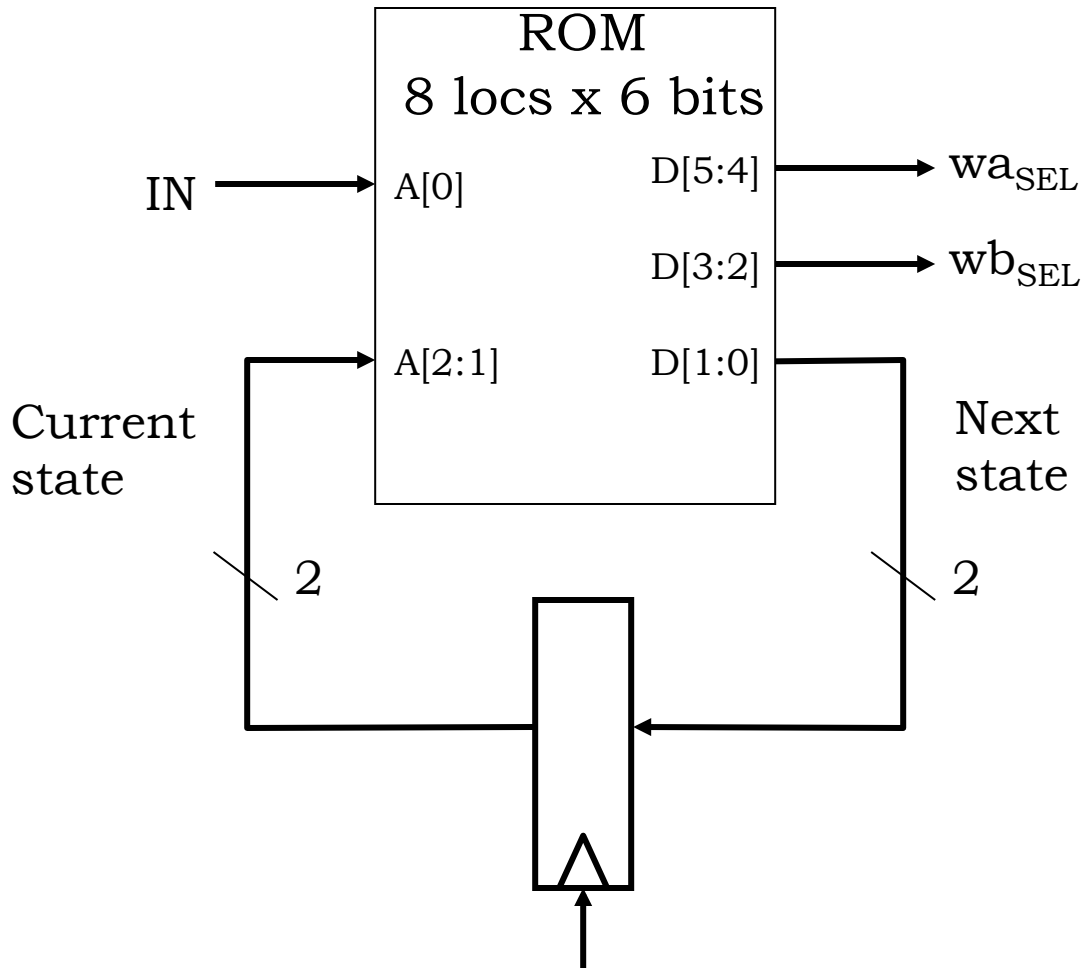

ROM contents

A[2:0]	*D[5:0]*
000	10 00 01
001	10 00 01
010	01 01 01
011	01 01 10
100	00 10 10
101	00 10 10

So Far: Single-Purpose Hardware

- Problem→ Procedure (High-level FSM)→ Implementation

- Systematic way to implement high-level FSM as a datapath + control FSM
  - Is this implementation an FSM itself?
  - If so, can you draw the truth table?

- How should we generalize our approach so we can solve many problems with one set of hardware?
  - More storage for operands and results
  - A larger repertoire of operations
  - General-purpose datapath

A Simple Programmable Datapath

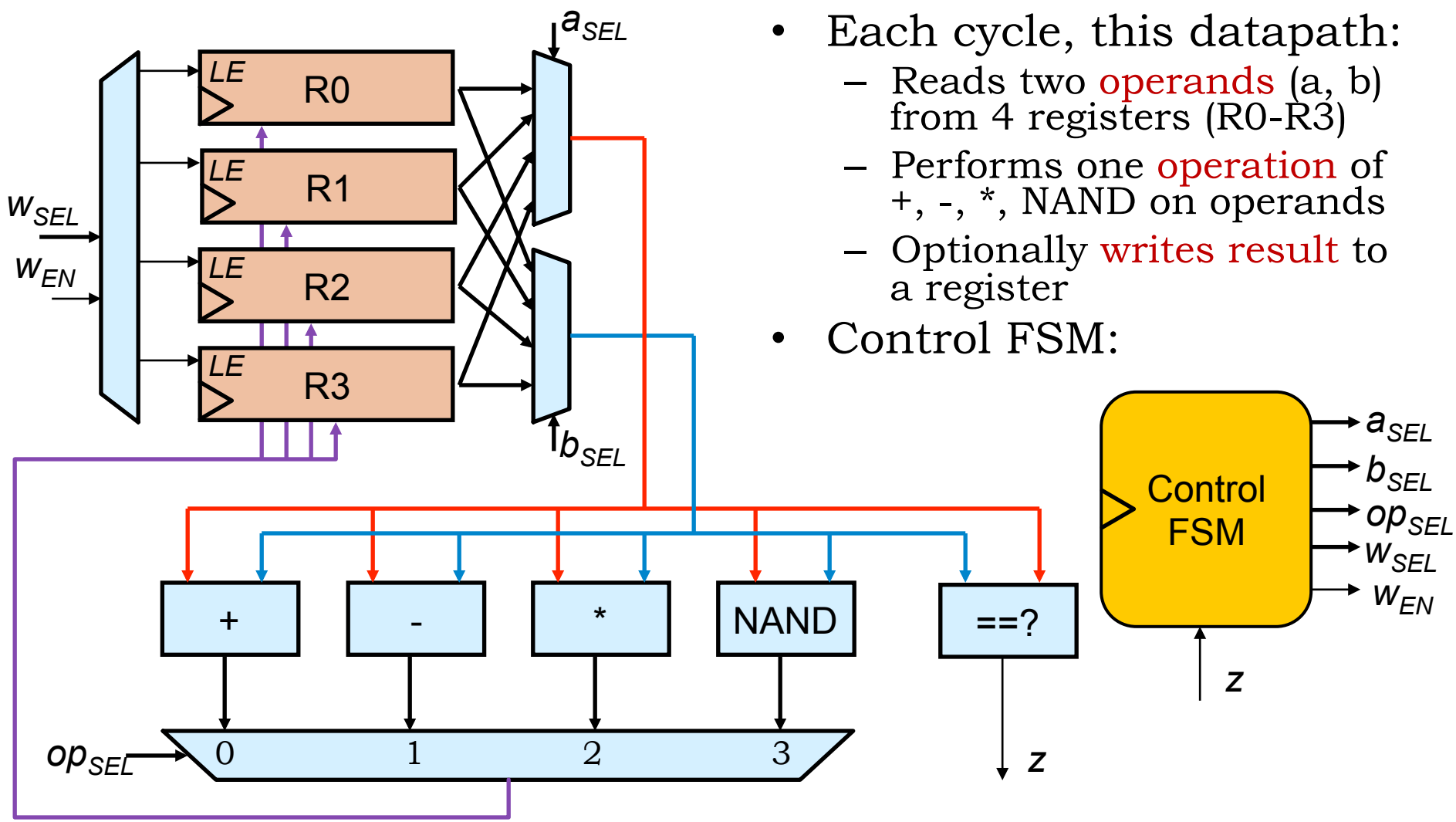

- Each cycle, this datapath:
  - Reads two operands (a, b) from 4 registers (R0-R3)
  - Performs one operation of +, -, *, NAND on operands
  - Optionally writes result to a register
- Control FSM:

A Control FSM for Factorial

- Assume initial register contents:

```
R0 value = 1
R1 value = N
R2 value = -1
R3 value = 0
```

- Control FSM:

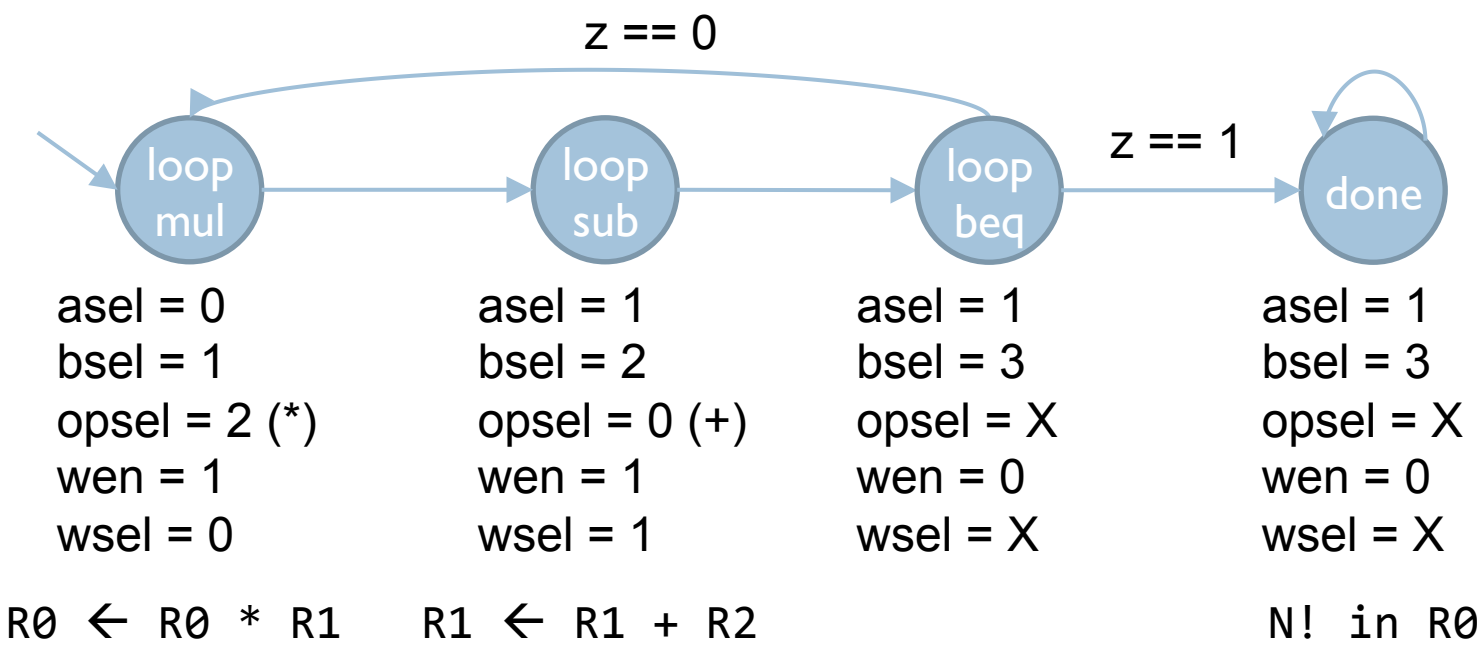

New Problem → New Control FSM

- You can solve many more problems with this datapath!
  - Exponentiation, division, square root, …
  - But nothing that requires more than four registers

- By designing a control FSM, we are programming the datapath

- Early digital computers were programmed this way!
  - ENIAC (1943):
    - First general-purpose digital computer
    - Programmed by setting huge array of dials and switches
    - Reprogramming it took about 3 weeks

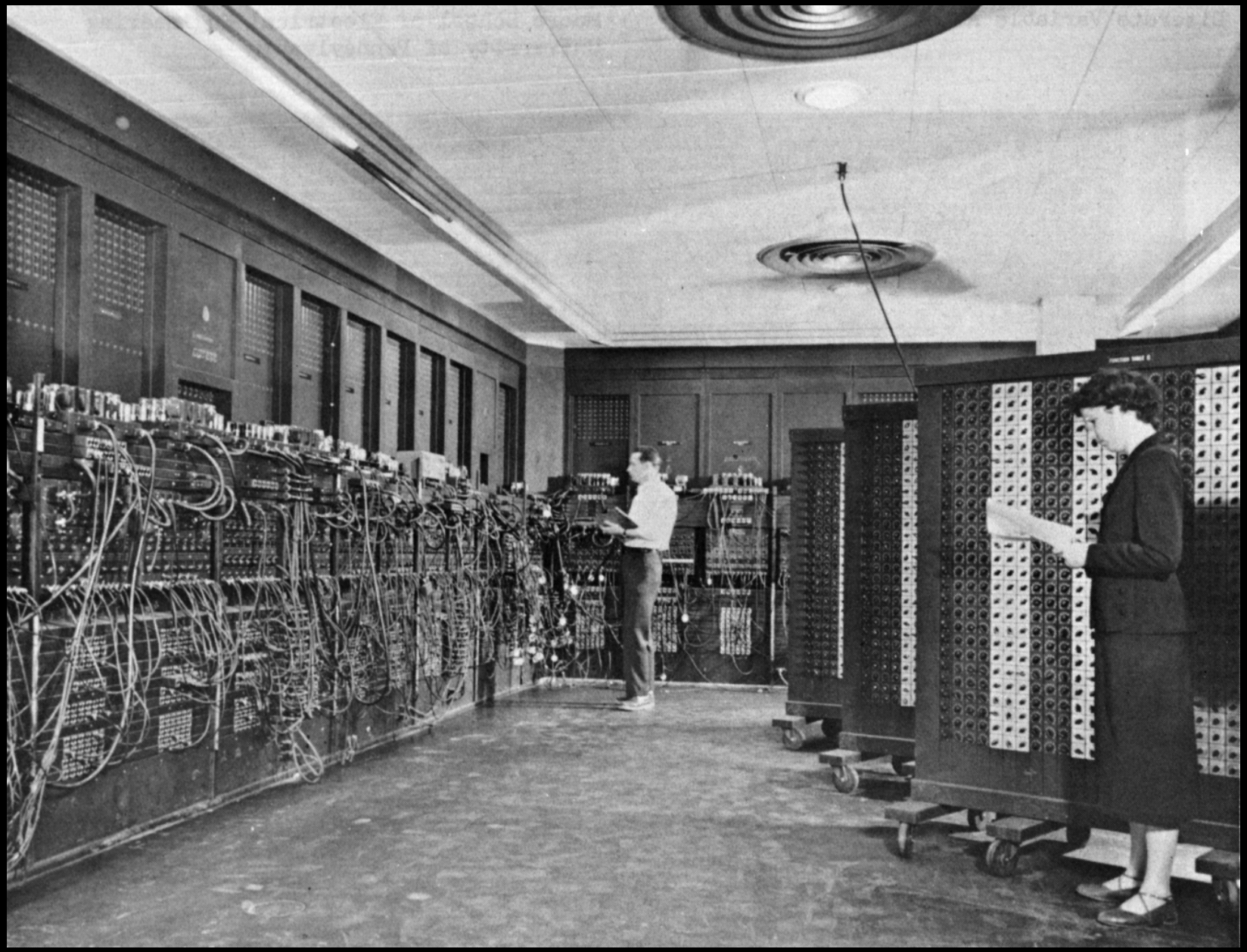

"Eniac" by Unknown - U.S. Army Photo.

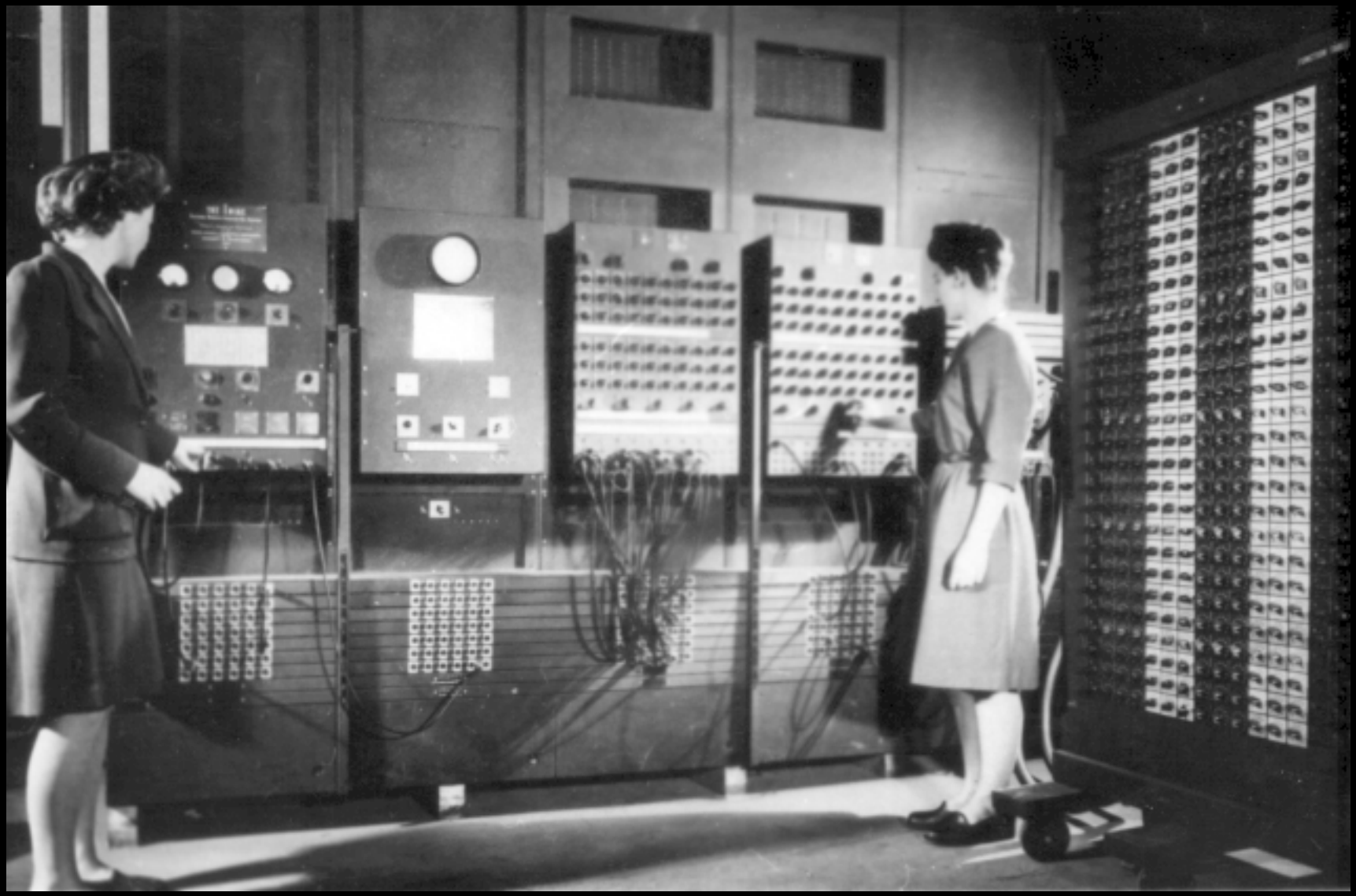

U.S. Army Photo.

The von Neumann Model

- Many approaches to build a general-purpose computer. Almost all modern computers are based on the von Neumann model (John von Neumann, 1945)
- Components:

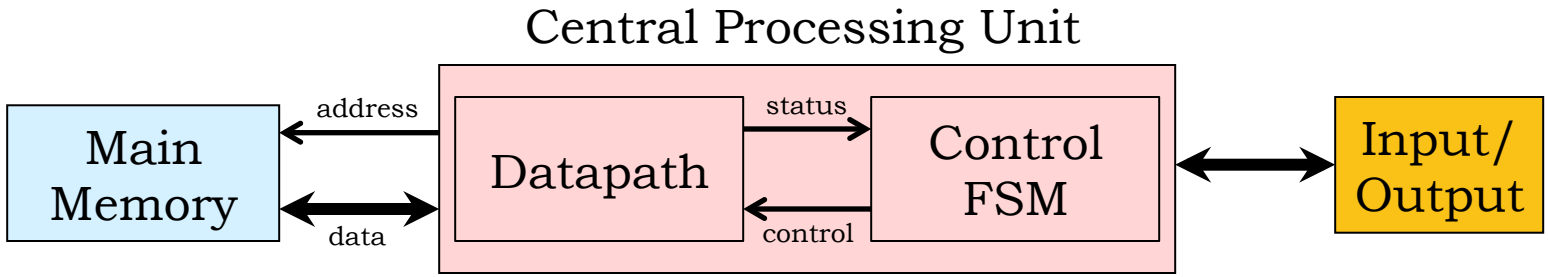

- Central processing unit:
  Performs operations on values in registers & memory
- Main memory:
  Array of W words of N bits each
- Input/output devices to communicate with the outside world

Key Idea: Stored-Program Computer

- Express program as a sequence of coded instructions
- Memory holds both data and instructions
- CPU fetches, interprets, and executes successive instructions of the program

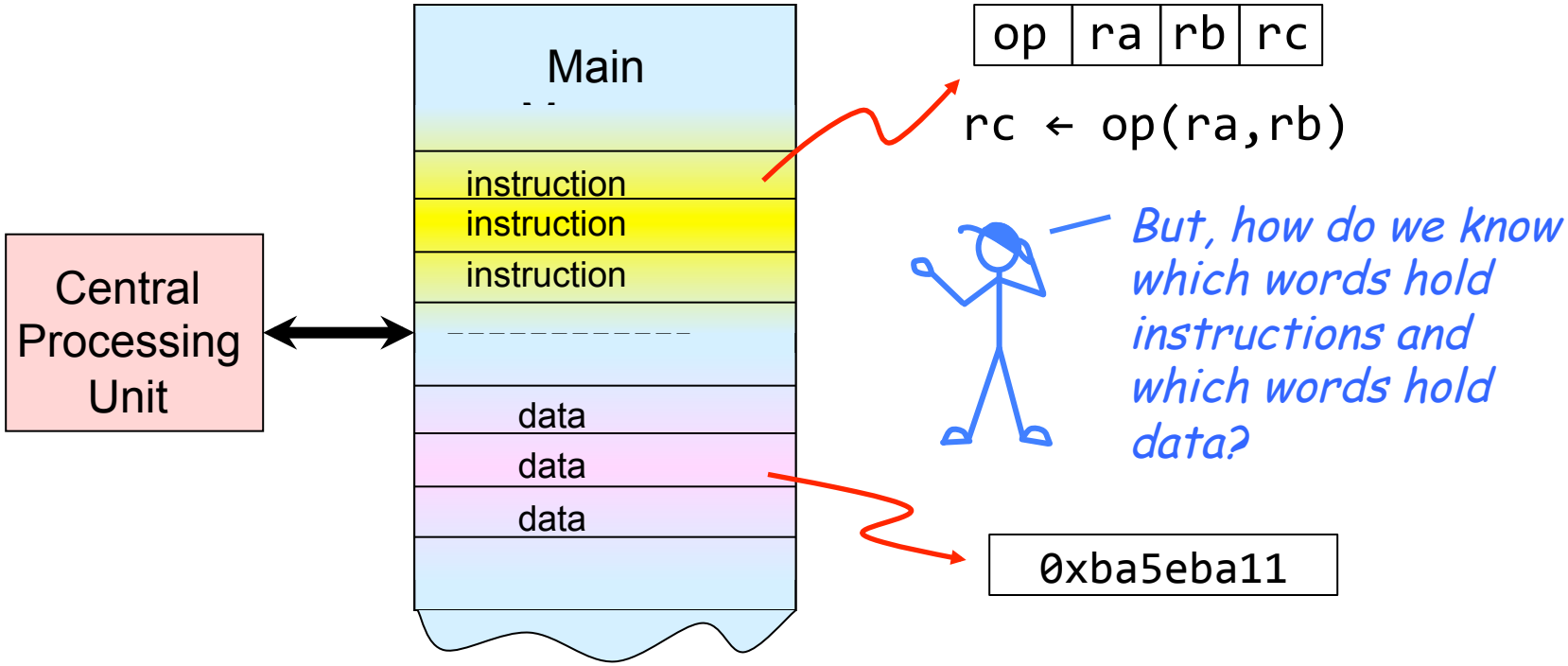

Anatomy of a von Neumann Computer

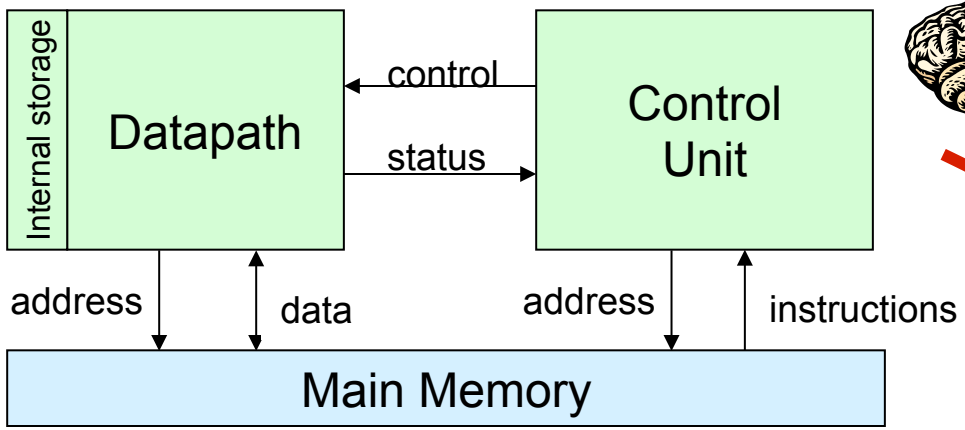

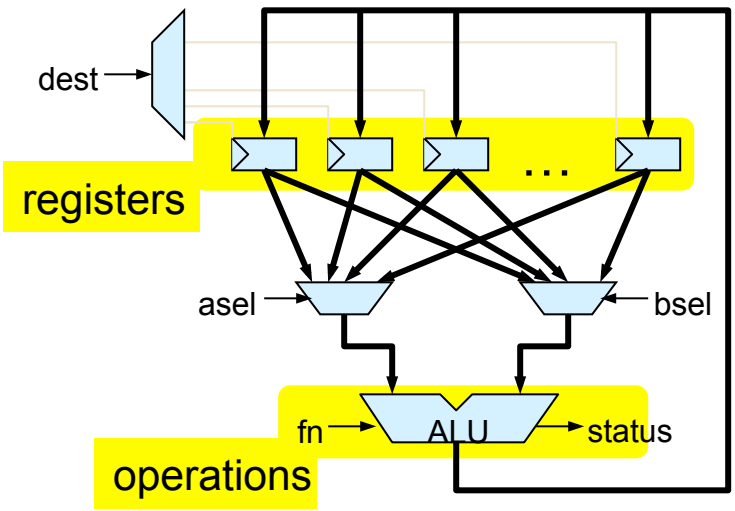

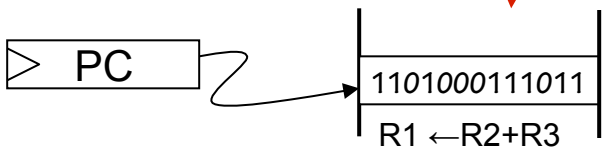

- Instructions coded as binary data
- Program Counter or PC: Address of the instruction to be executed
- Logic to translate instructions into control signals for datapath

Instructions

- Instructions are the fundamental unit of work
- Each instruction specifies:
  - An operation or opcode to be performed
  - Source operands and destination for the result

- In a von Neumann machine, instructions are executed sequentially
  - CPU logically implements this loop:
  - By default, the next PC is current PC + size of current instruction unless the instruction says otherwise

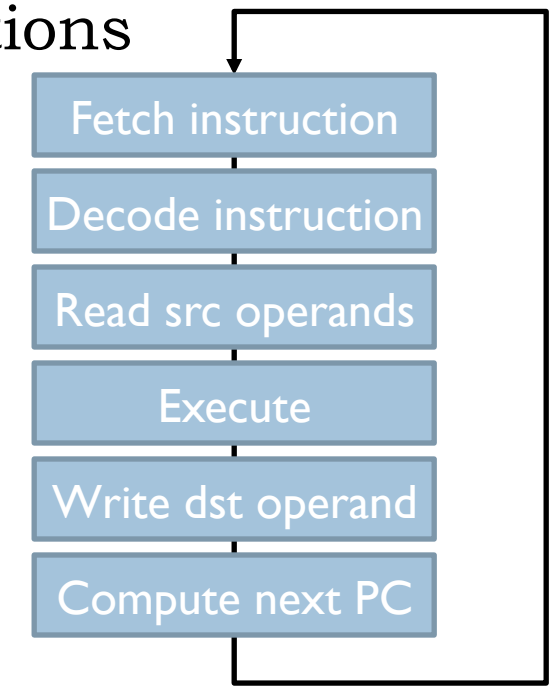

Instruction Set Architecture (ISA)

- ISA: The contract between software and hardware
  - Functional definition of operations and storage locations
  - Precise description of how software can invoke and access them
- The ISA is a new layer of abstraction:
  - ISA specifies what the hardware provides, not how it's implemented
  - Hides the complexity of CPU implementation
  - Enables fast innovation in hardware (no need to change software!)
    - 8086 (1978): 29 thousand transistors, 5 MHz, 0.33 MIPS
    - Pentium 4 (2003): 44 million transistors, 4 GHz, ~5000 MIPS
    - Both implement x86 ISA
  - Dark side: Commercially successful ISAs last for decades
    - Today's x86 CPUs carry baggage of design decisions from the 70's

Instruction Set Architecture Design

- Designing an ISA is hard:
  - How many operations?
  - What types of storage, how much?
  - How to encode instructions?
  - How to future-proof?

- How to decide? Take a quantitative approach
  - Take a set of representative benchmark programs
  - Evaluate versions of your ISA and implementation with and without feature
  - Pick what works best overall (performance, energy, area…)

- Corollary: Optimize the common case

Let's design our own instruction set: the Beta!

Beta ISA: Storage

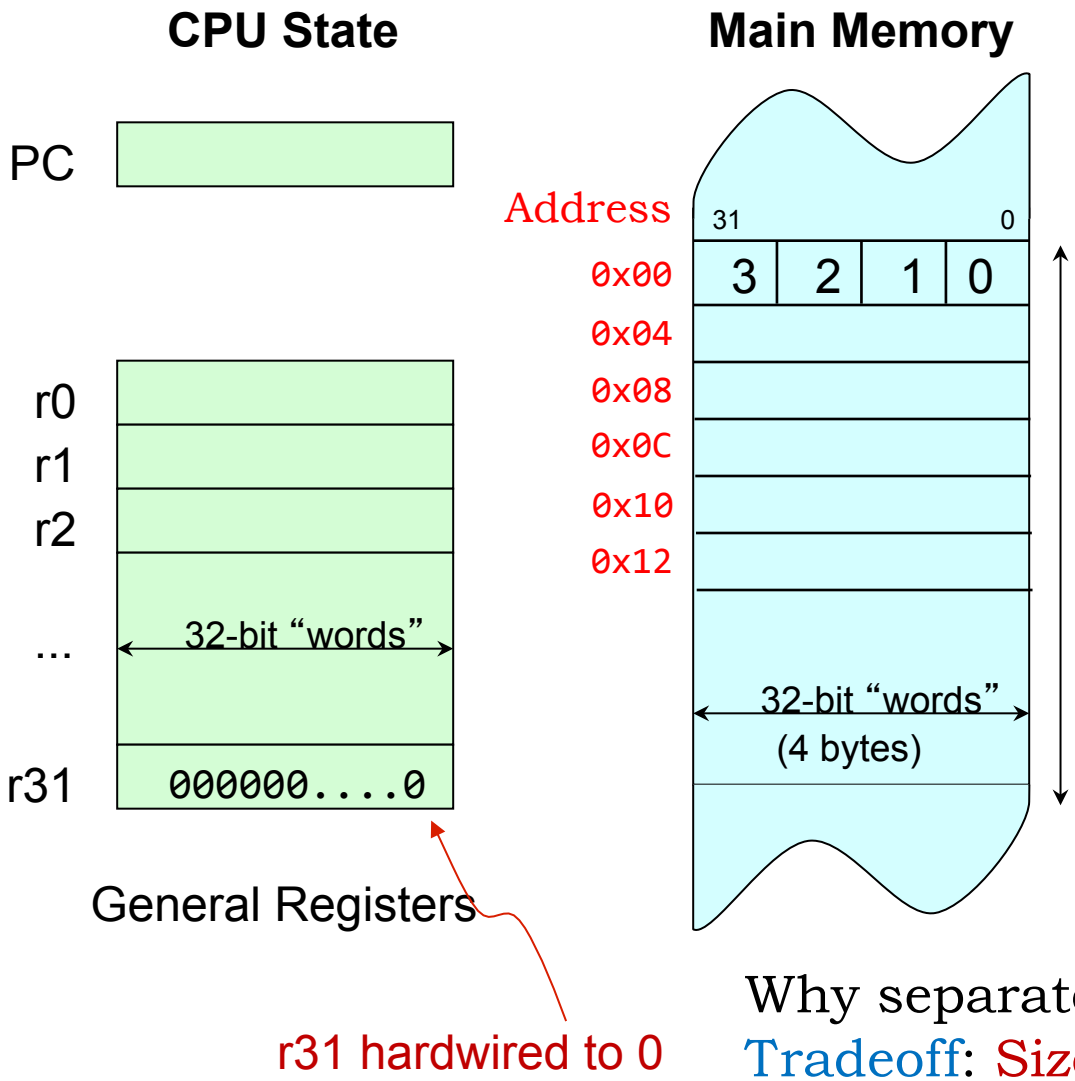

Up to 2^{32} bytes (4GB of memory) organized as 2^{30} 4-byte words

Each memory word is 32-bits wide, but for historical reasons the β uses byte memory addresses. Since each word contains four 8-bit bytes, addresses of consecutive words differ by 4.

Why separate registers and main memory?
Tradeoff: Size vs speed and energy

Storage Conventions

- Variables live in memory
- Registers hold temporary values
- To operate with memory variables
  - Load them
  - Compute on them
  - Store the results

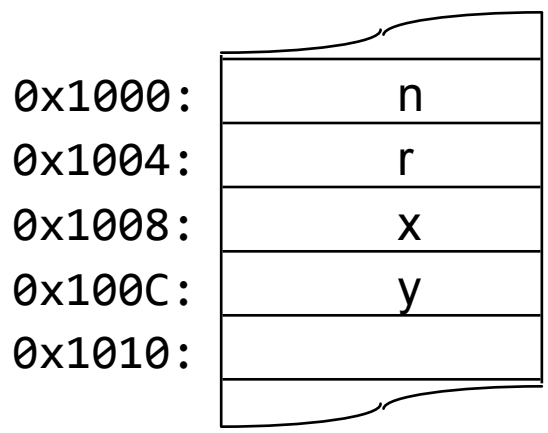


```
int x, y;
y = x * 37;
```

```
R0 ← Mem[0x1008]
R0 ← R0 * 37
Mem[0x100C] ← R0
```

Beta ISA: Instructions

- Three types of instructions:
  - Arithmetic and logical: Perform operations on general registers
  - Loads and stores: Move data between general registers and main memory
  - Branches: Conditionally change the program counter

- All instructions have a fixed length: 32 bits (4 bytes)
  - Tradeoff (vs variable-length instructions):
    - Simpler decoding logic, next PC is easy to compute
    - Larger code size

Beta ALU Instructions

Format:

OPCODE	r_c	r_a	r_b	*unused*

Example coded instruction: ADD

1 0 0 0 0 0	0 0 0 1 1	0 0 0 0 1	0 0 0 1 0	0 0 0 0 0 0 0 0 0 0 0 0 *unused*

OPCODE = 100000, encodes ADD

r_c=3, encodes R3 as destination

r_a=1, r_b=2 encodes R1 and R2 as source locations

32-bit hex: 0x80611000

We prefer to write a symbolic representation: `ADD(r1,r2,r3)`

```
ADD(ra,rb,rc):

  Reg[rc] ← Reg[ra] + Reg[rb]
```

"Add the contents of ra to the contents of rb; store the result in rc"

Similar instructions for other ALU operations:

- arithmetic: ADD, SUB, MUL, DIV
- compare: CMPEQ, CMPLT, CMPLE
- boolean: AND, OR, XOR, XNOR
- shift: SHL, SHR, SAR

Implementation Sketch #1

Now that we have our first set of instructions, we can create a more concrete implementation sketch:

OPCODE	r_c	r_a	r_b	*unused*

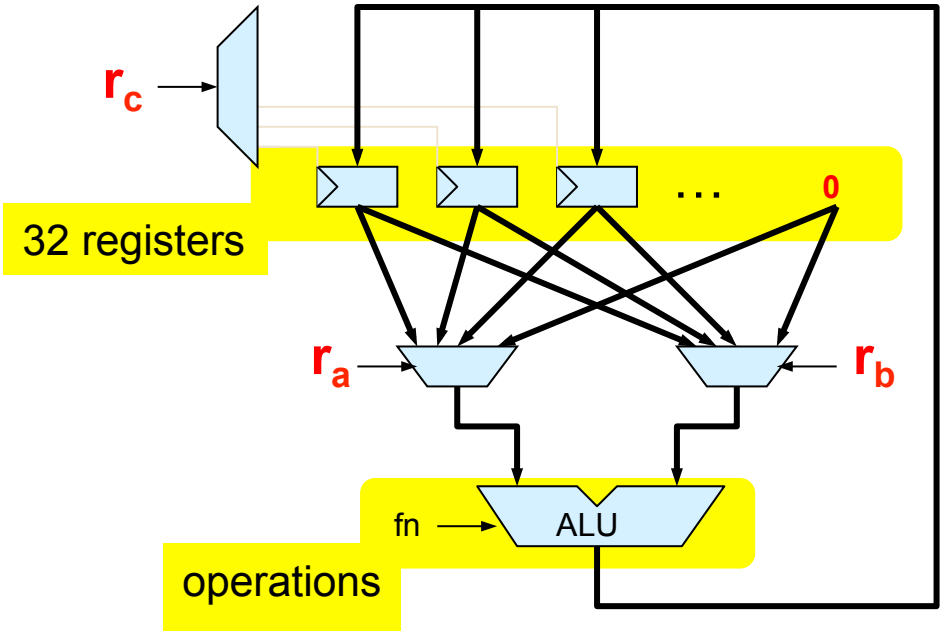

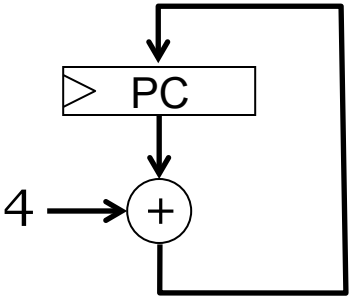

Should We Support Constant Operands?

Many programs use small constants frequently

e.g., our factorial example: 0, 1, -1

Tradeoff:

When used, they save registers and instructions

More opcodes → more complex control logic and datapath

Analyzing operands when running SPEC CPU benchmarks, we find that constant operands appear in

- >50% of executed arithmetic instructions
  - *Loop increments, scaling indicies*
- >80% of executed compare instructions
  - *Loop termination condition*
- >25% of executed load instructions
  - *Offsets into data structures*

Beta ALU Instructions with Constant

Format:

OPCODE	r_c	r_a	16-bit signed constant

Example instruction: ADDC adds register contents and constant:

1 1 0 0 0 0	0 0 0 1 1	0 0 0 0 1	1 1 1 1 1 1 1 1 1 1 1 1 1 1 1 0 1

OPCODE = 110000, encoding ADDC

r_c=3, encoding R3 as destination

r_a=1, encoding R1 as first operand

16-bit two's complement constant, encoding -3 as second operand (will be sign-extended to become 32-bit two's complement operand)

Symbolic version: `ADDC(r1,-3,r3)`

`ADDC(ra,const,rc):`

`Reg[rc] ← Reg[ra] + sext(const)`

"Add the contents of ra to const; store the result in rc"

Similar instructions for other ALU operations:

arithmetic: ADDC, SUBC, MULC, DIVC
compare: CMPEQC, CMPLTC, CMPLEC
boolean: ANDC, ORC, XORC, XNORC
shift: SHLC, SHRC, SARC

Implementation Sketch #2

Next we add the datapath hardware to support small constants as the second ALU operand:

OPCODE	r_c	r_a	16-bit signed constant

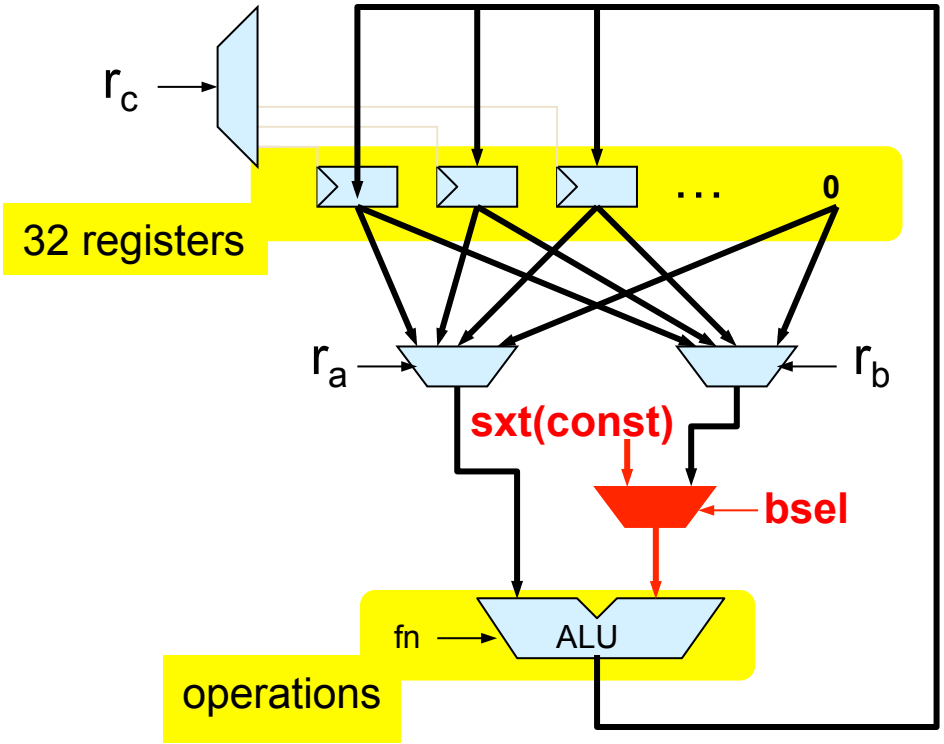

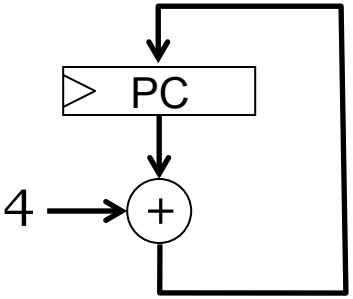

Beta Load and Store Instructions

Loads and stores move data between the internal registers and main memory

OPCODE	r_c	r_a	16-bit signed constant

Address calculation is just like ADDC instruction!

address

`LD(ra,const,rc)` `Reg[rc] ← Mem[Reg[ra] + sext(const)]`

Load rc with the contents of the memory location

`ST(rc,const,ra)` `Mem[Reg[ra] + sext(const)] ← Reg[rc]`

Store the contents of rc into the memory location

To access memory the CPU has to generate an address. LD and ST compute the address by adding the sign-extended constant to the contents of register ra.

- To access a constant address, specify R31 as ra.
- To use only a register value as the address, specify a constant of 0.

Using LD and ST

- Variables live in memory
- Registers hold temporary values
- To operate with memory variables
  - Load them
  - Compute on them
  - Store the results

```
int x, y;
y = x * 37;
```



```
R0 ← Mem[0x1008]
R0 ← R0 * 37
Mem[0x100C] ← R0
```

```
LD(R31,0x1008,R0)
MULC(R0,37,R0)
ST(R0,0x100C,R31)
```

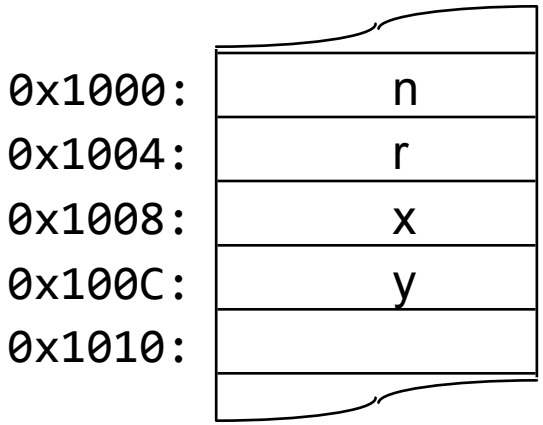

Can We Solve Factorial With ALU Instructions?

- No! Recall high-level FSM:

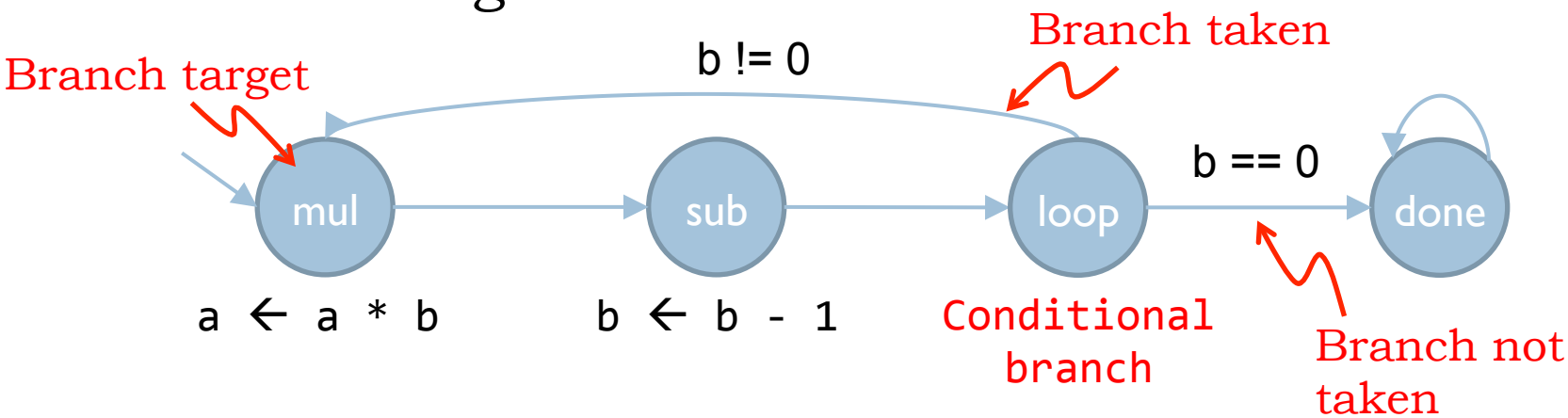

- Factorial needs to loop
- So far we can only encode sequences of operations on registers
- Need a way to change the PC based on data values!
  - Called "branching". If the branch is taken, the PC is changed. If the branch is not taken, keep executing sequentially.

Beta Branch Instructions

The Beta's *branch instructions* provide a way to conditionally change the PC to point to a nearby location…

… and, optionally, remembering (in Rc) where we came from (useful for procedure calls).

BEQ or BNE	r_c	r_a	16-bit signed constant

"offset" is a SIGNED CONSTANT encoded as part of the instruction!

`BEQ(ra,offset,rc):` Branch if equal

```
NPC ← PC + 4
Reg[rc] ← NPC
if (Reg[ra] == 0)
      PC ← NPC + 4*offset
else
      PC ← NPC
```

`BNE(ra,offset,rc):` Branch if not equal

```
NPC ← PC + 4
Reg[rc] ← NPC
if (Reg[ra] != 0)
      PC ← NPC + 4*offset
else
      PC ← NPC
```

`offset = distance in words to branch target, counting from the instruction following the BEQ/BNE. Range: -32768 to +32767.`

Can We Solve Factorial Now?

```
int a = 1;
int b = N;
do {
  a = a * b;
  b = b - 1;
} while (b != 0)
```

```
                          // Assume r1 = N
  ADDC(r31, 1, r0)        // r0 = 1
L:MUL(r0, r1, r0)         // r0 = r0 * r1
  SUBC(r1, 1, r1)         // r1 = r1 - 1
  BNE(r1, L, r31)         // if r1 != 0, run MUL next
                          // at this point, r0 = N!
```

- Remember control FSM for our simple programmable datapath?

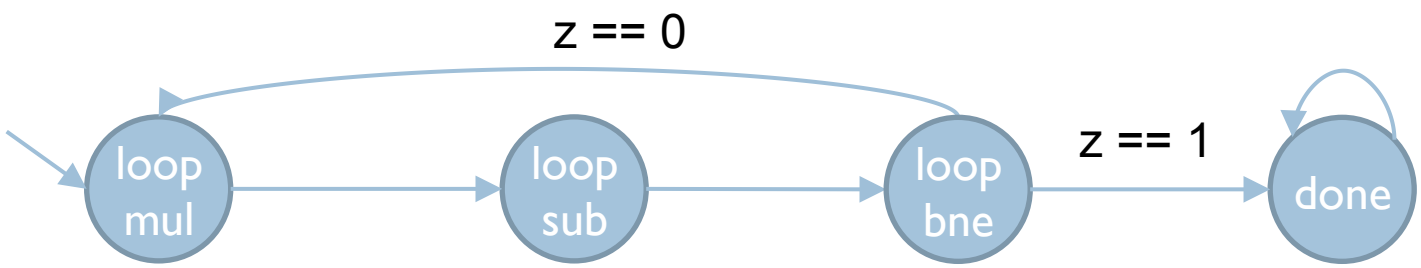

- Control FSM states → instructions!
  - Not the case in general
  - Happens here because datapath is similar to basic von Neumann datapath

Beta JMP Instruction

Branches transfer control to some predetermined destination specified by a constant in the instruction. It will be useful to be able to transfer control to a computed address.

011011	r_c	r_a	unused

JMP(Ra,Rc): Reg[Rc] ← PC + 4
PC ← Reg[Ra]

Useful for procedure call return…

```
        …
[0x100] BEQ(R31,sqrt,R28)
        …
[0x678] BEQ(R31,sqrt,R28)
        …
```

R28 = 0x104

R28 = 0x67C

```
sqrt:
    …
    JMP(R28,R31)
```

1st time: PC←0x104

2nd time: PC←0x67C

Beta ISA Summary

- Storage:
  - Processor: 32 registers (r31 hardwired to 0) and PC
  - Main memory: 32-bit byte addresses; each memory access involves a 32-bit word. Since there are 4 bytes/word, all addresses will be a multiple of 4.

- Instruction formats:

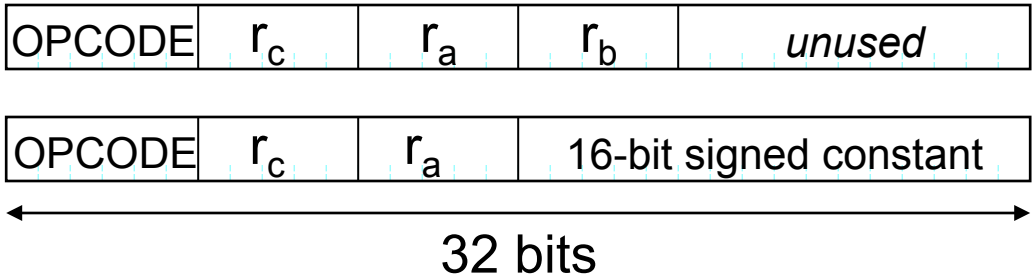

- Instruction types:
  - ALU: Two input registers, or register and constant
  - Loads and stores
  - Branches, Jumps